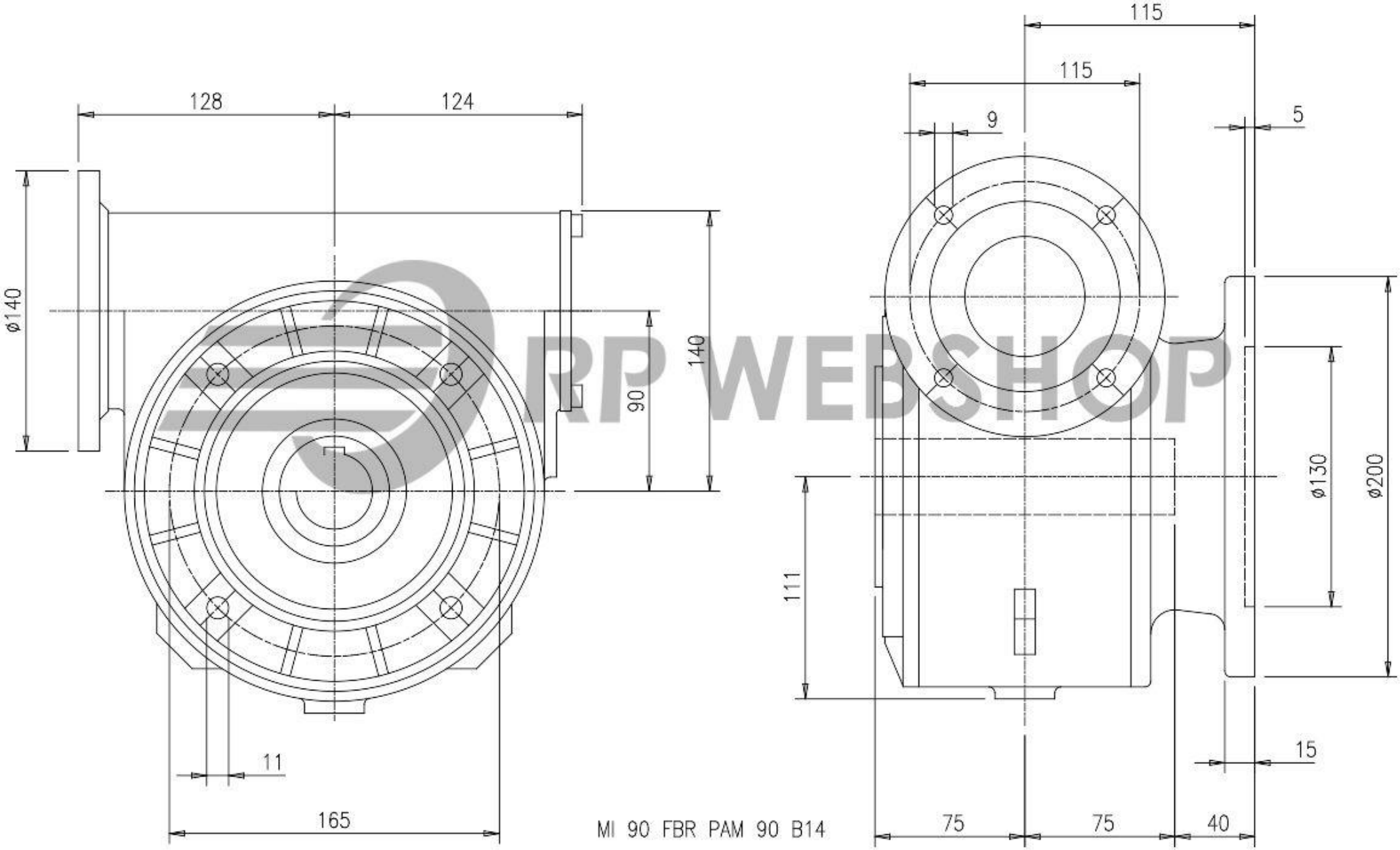

MI 90 FBR PAM 90 B14

RP WEBSHOP